1.Description

The digital temperature sensor with high-accuracy, low-power, and NTC/PTC thermistor replacements. It can be used for extended temperature measurement in communication, computer, consumer electronics, environmental, industrial and instrumentation applications. The UMW TMP102A provides ≤ ± 0.5°C temperature accuracy with good temperature linearity over the normal operating range of -40°C to +125°C. The UMW TMP102A can provide extended temperature measurement mode, extending the temperature measurement range from -55°C to +150°C. The rated working voltage range of the UMW TMP102A is 1.4V ~5.5V, and the maximum quiescent current in the entire working rage is 10μA (temperature measurement frequency 4Hz). The on-chip 12-bit ADC offers resolutions down to 0.0625°C. The UMW TMP102A adopts SOT563/DFNWB package of 1.6mm×1.6mm, is compatible with SMBus and I^2C interface, and allows up to four devices on one bus. The device also features an SMBus alert function.

2.Features

- Product number:
  UMW TMP102AIDRLR
  UMW TMP102AIDRLRD
- Temperature range: -55°C ~ +150°C
- Temperature accuracy:
  ±3.0°C (-40°C ~ +125°C)
  ±2.0°C（0°C ~ +65°C）
- Package:
  6-Pin SOT563(UMW TMP102AIDRLR)
  6-Pin DFNWB(UMW TMP102AIDRLRD)
- Supply voltage range: 1.4V ~ 5.5V
- Low quiescent current:
  Normal operation: ≤10μA (4Hz)
  Shutdown mode: ≤1μA
- Resolution: 12bits, 0.0625°C
- Digital output: SMBus™ and I^2C interface compatibility

3.Applications

- Portable and battery-powered applications
- Power-supply temperature monitoring
- Computer peripheral thermal protection
- Notebook computers
- Battery management
- Office machines
- Thermostat controls
- Electromechanical device temperatures
- General temperature measurements:
  – Industrial controls

4.Pinning Information

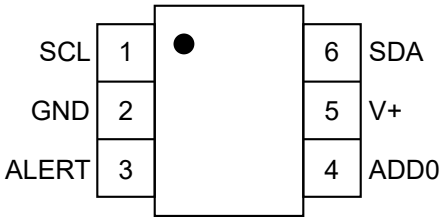

SOT-563

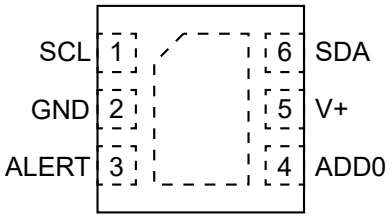

DFNWB

Pin Functions

Pin		Description
NO.	Name	
1	SCL	Serial clock. Open-drain output, requires a pull-up resistor
2	GND	Ground
3	ALERT	Over temperature alert. Open-drain output, requires a pull-up resistor
4	ADD0	Address select. Connect to V+, GND, SCL or SDA
5	V+	Supply voltage, 1.4V to 5.5V
6	SDA	Serial data input. Open-drain output, requires a pull-up resistor

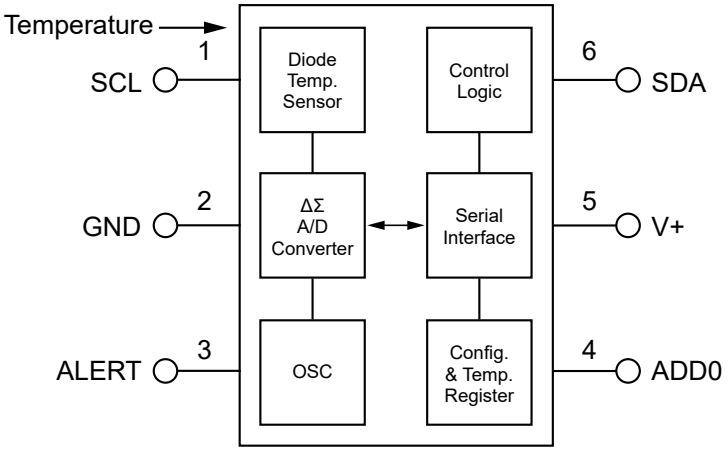

Figure 1. UMW TMP102A Internal Schematic Diagram

5.Absolute Maximum Ratings

Parameter	Min	Max	Unit
Supply Voltage, V+		6	V
Voltage at SCL, SDA, and ADD0	-0.5	6	V
Voltage at ALERT	-0.5	((V+)+0.3) and ≤5.5	V
Operating Temperature	-55	160	°C
Junction Temperature		150	°C
Storage Temperature	-60	150	°C

Over operating free-air temperature range (unless otherwise noted). Stresses beyond those listed under Absolute Maximum Ratings may cause permanent damage to the device.

6.ESD Ratings

Parameter		Value	Unit
Electrostatic Discharge, V_{ESD}	Human Body Mode (HBM), per ANSI/ESDA/JEDEC JS-001	±2000	V
	Machine Mode (MM), per JEDEC-STD Classification	300	V

7.Recommended Operating Conditions

Parameter	Symbol	Min	Nom	Max	Unit
Supply voltage	V+	1.4	3.3	5.5	V
Operating temperature range	T_A	-50		125	°C

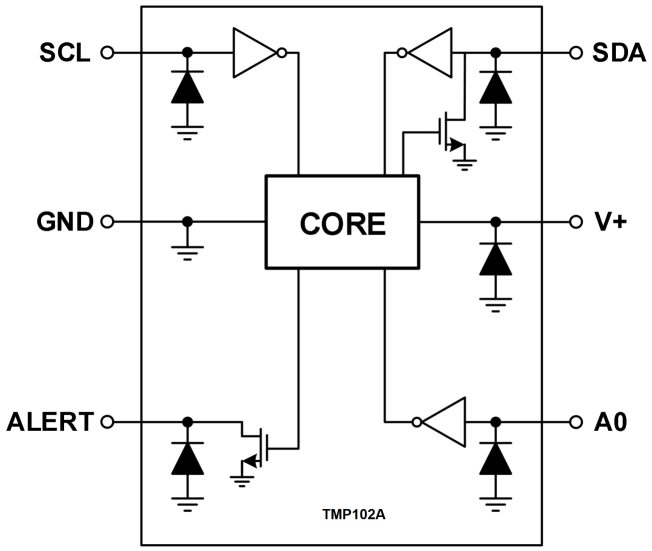

Figure 2. UMW TMP102A Internal ESD Equivalent Circuit

8.Electrical Characteristics

Electrical characteristics of devices at T_A=+25°C and V+=1.4V to 5.5V (unless otherwise noted)

Parameter	Conditions	Min	Typ	Max	Units
Operating Temperature Range		-40		125	°C
	Extended mode	-55		150	°C
Accuracy (Temperature Error)	+25°C, V+=3.3V		±0.5	±2	°C
	0°C to +65°C, V+=3.3V		±0.5	±2	°C
	-40°C to +125°C		±1	±3	°C
DC Power Supply Sensitivity	-40°C to +125°C		0.2	±0.5	°C/V
Resolution			0.0625		°C
			12		bits
Conversion Time			26	35	ms
Conversion Modes	CR1=0, CR0=0		0.25		conv/s
	CR1=0, CR0=1		1		conv/s
	CR1=1, CR0=0 (default)		4		conv/s
	CR1=1, CR0=1		8		conv/s
Timeout Time			30	40	ms
Communication Frequency	Fast mode	0.001		0.4	MHz
	High-speed mode	0.001		2.75	MHz
Power Supply Voltage		1.4	3.3	5.5	V
Average Quiescent Current, I_Q	Serial bus inactive, CR1=1,CR0=0 (default)		7	10	μA
	Serial bus active, SCL frequency=400kHz		15		μA
	Serial bus active, SCL frequency=2.75MHz		85		μA
Shutdown Current, I_{SD}	Serial bus inactive		0.5	1	μA
	Serial bus active, SCL frequency=400 kHz		10		μA
	Serial bus active, SCL frequency=2.75MHz		80		μA

9.Detailed Description

Device Functional Modes

Continuous Conversion Mode

The default working mode of UMW TMP102A is continuous conversion mode, and the typical conversion time is 26ms. During continuous conversion mode, the ADC performs continuous temperature conversions and stores each results to the temperature register, overwriting the result from the previous conversion. The conversion rate bits, CR1 and CR0, configure the UMW TMP102A for conversion rates of 0.25Hz, 1Hz, 4Hz, or 8Hz. The conversion rate can be changed by configuring CR1 and CR0, the UMW TMP102A makes a conversion and then powers down and waits for the appropriate delay set by CR1 and CR0, as shown in Figure 3. Table 1 lists the settings for CR1 and CR0.

Table 1. Conversion Rate Settings

CR1	CR0	Conversion Rate
0	0	0.25Hz
0	1	1Hz
1	0	4Hz (default)
1	1	8Hz

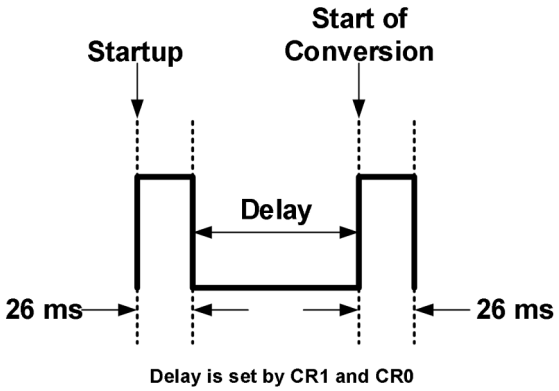

Figure 3. Schematic Diagram of Continuous Conversion

Extended Mode

The temperature measurement range of UMW TMP102A is -40°C to +125°C in normal temperature measurement mode. By setting the EM bit in the configuration register to1, the UMW TMP102A can enter the extended temperature measurement mode. Extended mode (EM = 1) allows measurement of temperatures above 128°C by configuring the temperature register and the temperature limit registers for 13-bit data format. The read-only temperature register in UMW TMP102A uses two bytes to store the temperature measurement results, as shown in Table 8 and Table 9. Byte 1 is the MSB, byte 2 is the LSB, and the upper 12 bits (13 bits in extended mode) are used to indicate the temperature. It is not necessary to read the LSB when the temperature information of the LSB is not required.

The data format of the UMW TMP102A temperature measurement results is listed in Table 2 and Table 3, where 1LSB = 0.0625°C, and negative numbers are expressed in binary two's complement format. When powered on or reset, the temperature register of the UMW TMP102A will be set to 00h until the next temperature conversion is complete. Unused bits in the temperature register always read as 0 (not shown in the table below).

Table 2. 12-bit Temperature Data Format in Normal Temperature Measurement Mode

Temperature (°C)	Digital Output (Binary)	HEX
128	0111 1111 1111	7FF
127.9375	0111 1111 1111	7FF
100	0110 0100 0000	640
80	0101 0000 0000	500
75	0100 1011 0000	4B0
50	0011 0010 0000	320
25	0001 1001 0000	190
0.25	0000 0000 0100	004
0	0000 0000 0000	000
-0.25	1111 1111 1100	FFC
-25	1110 0111 0000	E70
-55	1100 1001 0000	C90

Table 3. 13-bit Temperature Data Format in Extended Temperature Measurement Mode

Temperature (°C)	Digital Output (Binary)	HEX
150	0 1001 0110 0000	0960
128	0 1000 0000 0000	0800
127.9375	0 0111 1111 1111	07FF
100	0 0110 0100 0000	0640
80	0 0101 0000 0000	0500
75	0 0100 1011 0000	04B0
50	0 0011 0010 0000	0320
25	0 0001 1001 0000	0190
0.25	0 0000 0000 0100	0004
0	0 0000 0000 0000	0000
-0.25	1 1111 1111 1100	1FFC
-25	1 1110 0111 0000	1E70
-55	1 1100 1001 0000	1C90

Shutdown Mode

Shutdown mode of the UMW TMP102A device allows the user to conserve power by shutting down all device circuitry except the serial interface, thereby reducing the current of the UMW TMP102A to less than 0.5μA (typical value). Shutdown mode is initiated when the SD bit in the configuration register is set to 1; after configuring the registers in this way, the UMW TMP102AI will shut down after completing the current conversion. To exit shutdown mode, write SD bit to 0, the UMW TMP102A will re-enter continuous conversion mode.

One-Shot Mode

The UMW TMP102A features a one-shot mode. When the UMW TMP102A is in shutdown mode, writing 1 to the OS bit starts a single temperature conversion. During the conversion, the OS bit reads 0. The UMW TMP102AI returns to the shutdown state at the completion of the single conversion, the OS bit reads 1. This feature is useful for reducing power consumption when continuous temperature monitoring is not required.

Since the UMW TMP102A only needs 26ms for a single temperature measurement (typical value), it can achieve a higher conversion rate through this mode. When using one-shot mode, 30 or more conversions per second are possible.

ALERT

The UMW TMP102A has a temperature alarm function, by writing the TM bit in the configuration register as 0 or 1, the UMW TMP102A can be configured as comparator mode or interrupt mode to achieve different alarm functions.

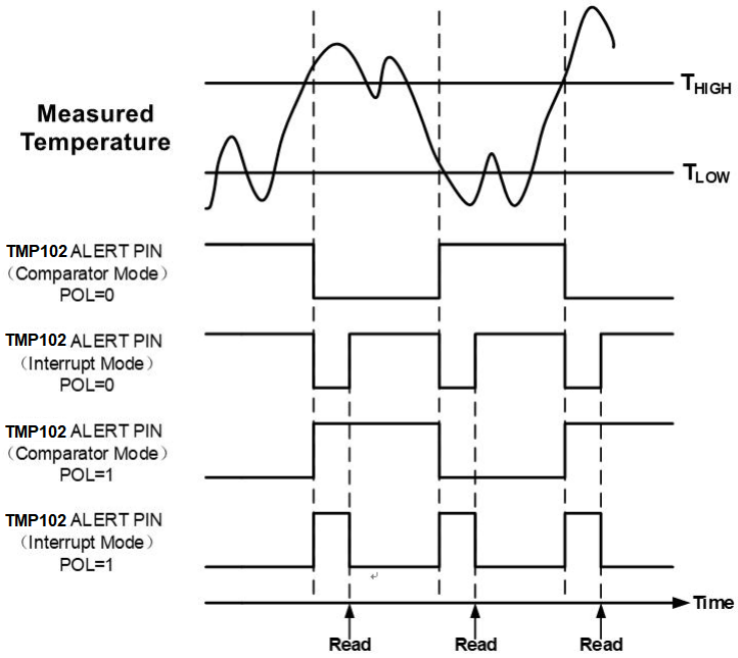

Figure 4 Status of the ALERT Pin in Different Modes

In comparison mode (TM=0), when the number of times the temperature measurement result continuously equals or exceeds the temperature upper limit register value T_{HIGH} reaches the value defined by the F1/F0 bits in the configuration register (as shown in Table 4), the ALERT pin will be activated. The ALERT pin will remain active until the number of times the temperature measurement result is continuously lower than the temperature lower limit register value T_{LOW} reaches the value defined by F1/F0.

In interrupt mode (TM=1), the ALERT pin will be activated when the temperature measurement result equals or exceeds T_{HIGH} continuously for a number of times to the value defined by F1/F0 (as shown in Table 4). The ALERT pin remains active until it is cleared by one of three events: a read of any register, a successful SMBus alert response, or a shutdown command. After the ALERT pin is cleared, the device starts to compare temperature readings with the T_{LOW}. The ALERT pin becomes active again only when the temperature drops below TLOW for a consecutive number of conversions as set by F1/F0 bits. The ALERT pin remains active until cleared by any of the same

three clearing events. The user can also reset the UMW TMP102A to clear the ALERT pin state by using the global response reset command (General Call). This operation also resets other internal registers in the UMW TMP102A and returns the device to compare mode (TM=0). Table 4 shows the specific configuration of the F1/F0 bits.

Table 4. Number of Over-Temperature Required to Activate the ALERT Pin

F1	F0	Required Number (Times)
0	0	1 (Default)
0	1	2
1	0	4
1	1	6

The polarity bit (POL) in the configuration register allows the user to adjust the polarity of the ALERT pin output. If the POL bit is set to 0 (default), the ALERT pin becomes active low. When POL bit is set to 1, the ALERT pin becomes active high. The above situations are shown in Figure 4.

10.Serial Interface

Bus Overview

The UMW TMP102A is compatible with SMBus and I^2C interfaces. In the SUMBus protocol, the device that initiates the transfer is called a master, and the devices controlled by the master are slaves. The bus must be controlled by a master device that generates the serial clock (SCL), controls the bus access, and generates the START and STOP conditions. To address a specific device, a START condition is initiated, indicated by pulling the data line (SDA) from a high- to low-logic level when the SCL pin is high. All slaves on the bus receive the 8-bits slave address on the rising edge of the clock, and the last bit indicates whether a read or write operation is intended. During the ninth clock pulse, the addressed slave generates an acknowledge and pulls the SDA pin low to respond to the master. A data transfer is then initiated and sent over eight clock pulses followed by an acknowledge bit. When all data are transferred, the master generate a STOP signal to end the communication by pulling SDA from low to high when SCL is high.

During the data transfer, the SDA pin must remain stable when the SCL pin is high because any change in the SDA pin when the SCL pin is high is interpreted as a START or STOP signal.

Serial Bus Address

To communicate with the UMW TMP102A, the master must first address slave devices through an address byte. The address byte has seven address bits and a read-write (R/W) bit that indicates the intent of executing a read or write operation. The UMW TMP102A features an address pin to allow up to four devices to be addressed on a single bus. Table 5 shows the connection mode of the ADD0 pins corresponding to each slave address.

Table 5. Address Pin and Slave Addresses

Device Two-wire Address	Device Two-wire Address
1001000	GND
1001001	V+
1001010	SDA
1001011	SCL

11.Writing and Reading Operation

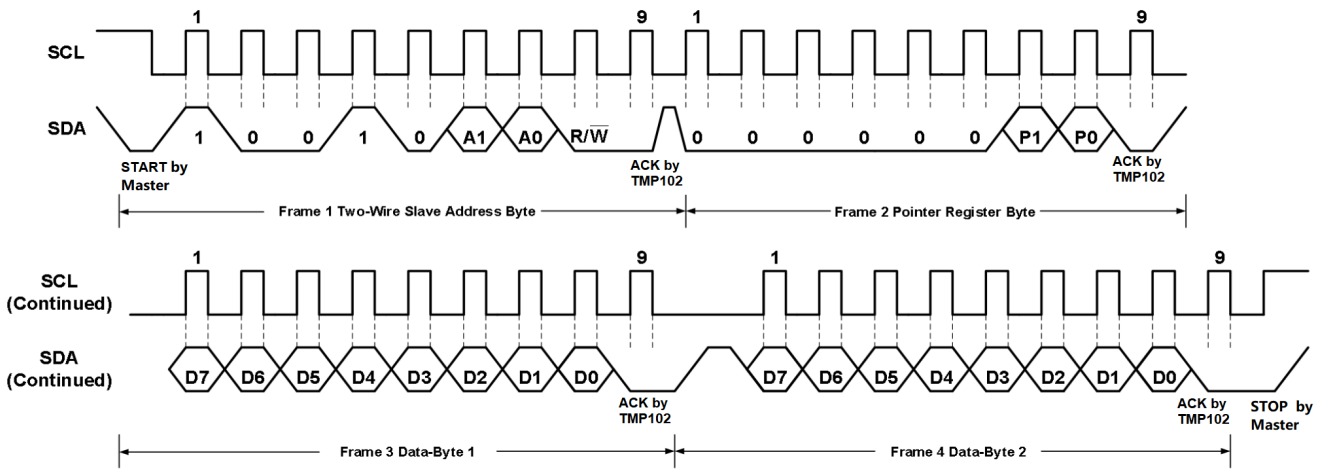

Figure 5. Two-wire Write Command Timing Diagram

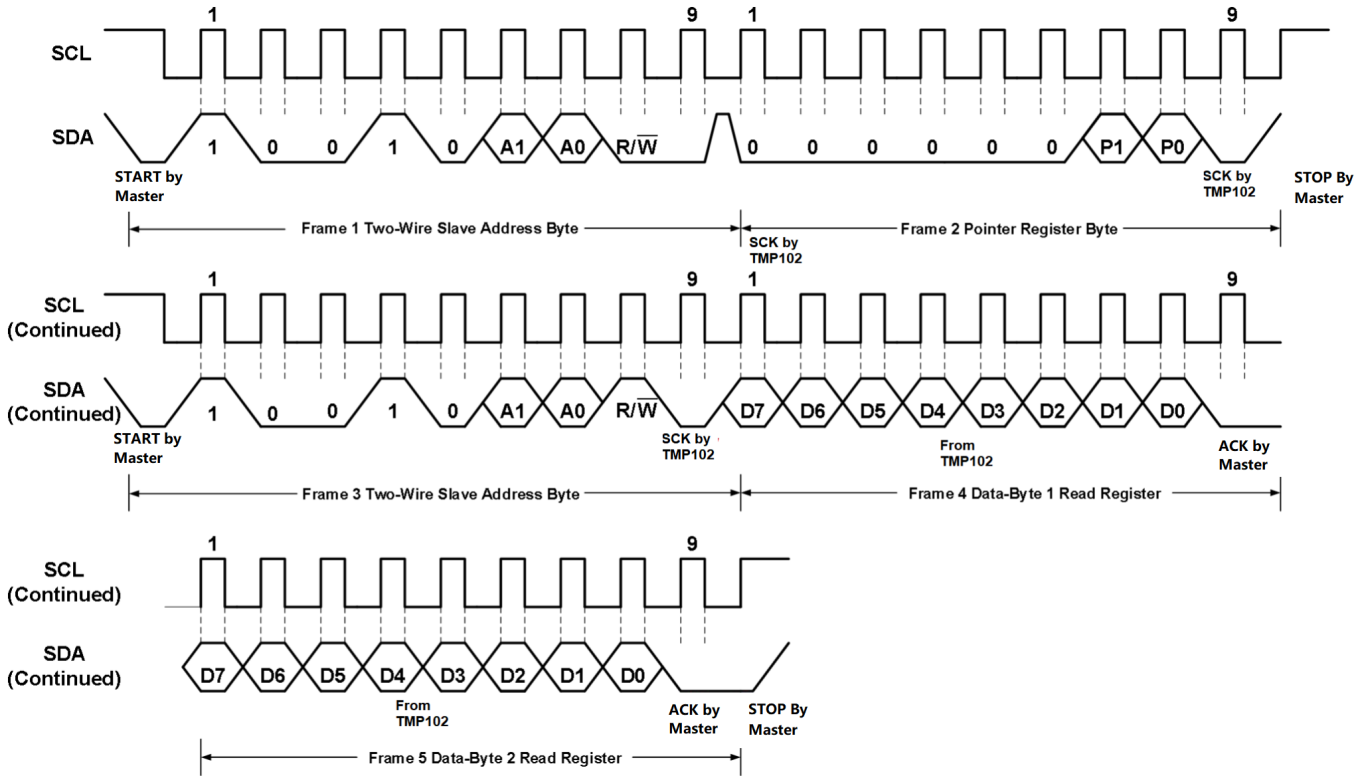

Figure 6. Two-wire Read Command Timing Diagram

When writing data to the UMW TMP102A, after the slave address byte is sent, accessing a particular register on the UMW TMP102A is accomplished by writing the appropriate value to the pointer register. Every write operation to the UMW TMP102A requires a value for the pointer register. When reading from the UMW TMP102A device, after the slave address byte is sent, the corresponding pointer register byte also needs to be sent. Unlike the write operation, if the user need to repeatedly read data from the same register, it is not required to send the pointer register byte separately each time, the last value stored in the pointer register will be read by the device automatically; to change the register pointer for a read operation, a new value must be written to the pointer register. The action is accomplished by issuing a slave-address byte with the R/W bit low, followed by the pointer register byte. The master can then generate a START condition and send the slave address byte with the R/W bit high to initiate the read command.

Register bytes are sent with the MSB first, followed by the LSB. Figure 5 and Figure 6 show schematic diagrams of the above read and write operations.

SMBus Alert Function

The UMW TMP102A supports the SMBus alert function. When the UMW TMP102A operates in interrupt mode (TM=1), the master can send out and SMBus ALERT command (19h) to the bus. If the ALERT pin is active, the device acknowledges the SMBus ALERT command and responds by returning the slave address. The eighth bit (LSB) of the slave address byte indicates if the alert condition is caused by the temperature exceeding T_{HIGH} or falling below T_{LOW}. This bit is equal to POL if the temperature is greater than or equal to T_{HIGH}; this bit is equal to POL if the temperature is less than T_{LOW}.

If multiple devices on the bus respond to the SMBus ALERT command, the bus will return the lowest two-wire address. The UMW TMP102A ALERT pin becomes inactive at the completion of the SMBus ALERT command; the ALERT pin of the UMW TMP102A that does not return an address will remain active. Sending the SMBus ALERT command again can continue to clear the ALERT pin of the UMW TMP102A with the current lowest address. The above process is detailed in Figure 7.

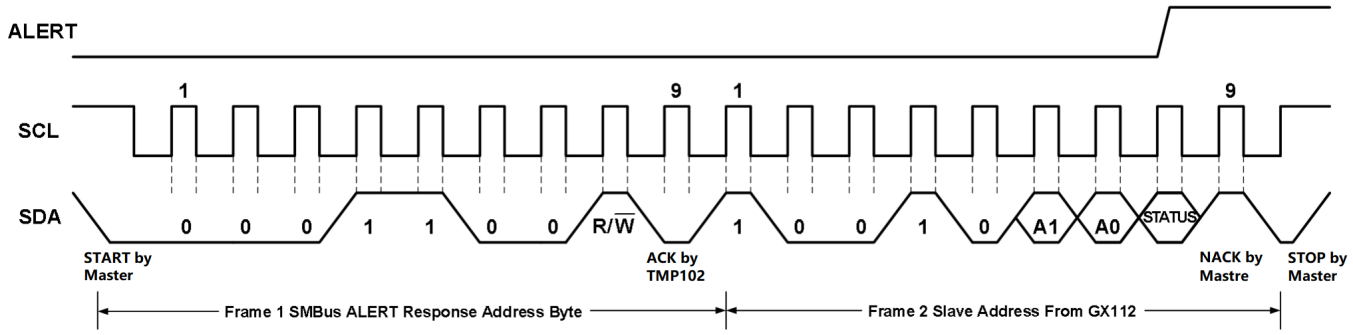

Figure 7. SMBus Alert Timing Diagram

General Call Reset

The UMW TMP102A responds to the two-wire general call address 00h. The device acknowledges the general call address and responds to commands in the second byte. If the second byte is 06h, the UMW TMP102A resets the internal registers to the power-up reset values, and aborts the current temperature conversion. If the second byte is other value, the UMW TMP102A will not respond.

High-Speed Mode

For the two-wire bus to operate at frequencies above 400kHz, the host device must issue a High-Speed mode host code (0000 1xxxb) as the first byte after a START condition to switch the bus to high-speed operation. The UMW TMP102A device does not acknowledge this byte, but it does switch the input filters on the SDA and SCL and the output filters on the SDA to operate in High-Speed mode, allowing the bus to transmit data at frequencies up to 2.75MHz. After the High-Speed mode host code is issued, the host transmits a two-wire device address to initiate a data transfer operation. The bus continues to operate in High-Speed mode until a STOP condition occurs on the bus. Upon receiving the STOP condition, the UMW TMP102A switches the input and output filters back to fast-mode operation.

Time-Out Function

The UMW TMP102A resets the serial interface if SCL is held low for 30ms (typical) between a START and STOP condition, the UMW TMP102A releases the SDA bus and waits for a START condition. To avoid activating the Time-Out function, a communication speed of at least 1kHz must be maintained.

12.Register Descriptions

Pointer Register

Figure 8 shows the internal register structure of the UMW TMP102A device. The 8-bit Pointer Register of the device is used to address a given data register. The Pointer Register uses the two LSBs (see Table 6) to identify which of the data registers must respond to a read or write command. The power-up reset value of P1/P0 is '00'. By default, the UMW TMP102A reads the temperature on power-up.

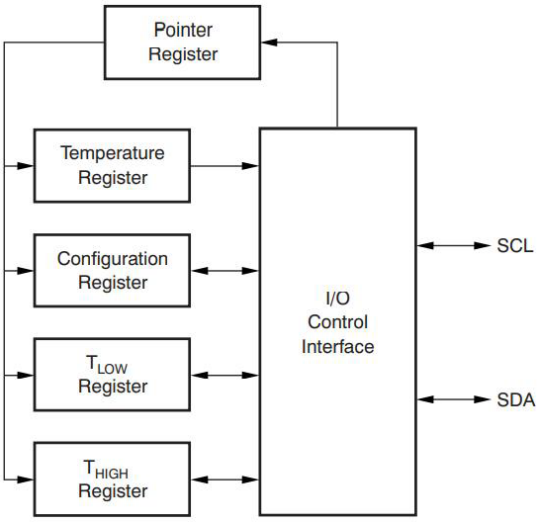

Figure 8. Internal Register Structure

Table 6 lists the pointer address of the registers available in the UMW TMP102A device. During a write command, bytes P2 through P7 must always be 0.

Table 6. Pointer Address

P1	P0	Register
0	0	Temperature Register (Read Only)
0	1	Configuration Register (Read/Write)
1	0	T_{LOW} Register (Read/Write)
1	1	T_{HIGH} Register (Read/Write)

Table 7. Pointer Register Byte

P7	P6	P5	P4	P3	P2	P1	P0
0	0	0	0	0	0	Register Bits	

Temperature Register

The Temperature Register of the UMW TMP102A device is configured as a 12-bit or 13-bit read-only register (setting the EM bit to 0 or 1) that stores the output of the most recent conversion. Two bytes must be read to obtain data and are listed in Table 8 and Table 9. Byte 1 is the most significant byte (MSB), followed by byte 2, the least significant byte (LSB). The T11~T0 bits (T12~T0 bits in extended mode) are used to indicate temperature. Byte 2 does not have to be read if that information is not needed. The D0 bit of byte 2 in the temperature register indicates whether the device is in normal mode (D0=0) or extended mode (D0=1) at this time, which can be used to distinguish the format of the two temperature register data.

Table 8. Byte 1 of Temperature Register

Byte	D7	D6	D5	D4	D3	D2	D1	D0
1	T11	T10	T9	T8	T7	T6	T5	T4
	(T12)	(T11)	(T10)	(T9)	(T8)	(T7)	(T6)	(T5)

Table 9. Byte 2 of Temperature Register

Byte	D7	D6	D5	D4	D3	D2	D1	D0
1	T3	T2	T1	T0	0	0	0	0
	(T4)	(T3)	(T2)	(T1)	(T0)	(0)	(0)	(1)

Temperature Limit Register

The temperature limits are stored in the T_{HIGH} and T_{LOW} registers in the same format as the temperature result, and can be configured as 12-bit or 13-bit according to the value of the EM bit. Table 10 and Table 11 list the format for the T_{HIGH} and T_{LOW} registers, the configuration in extended mode is in brackets. The power-up reset values for T_{HIGH} and T_{LOW} are:

$$T_{HIGH}=+80°C,\ T_{LOW}=+75°C$$

Table 10. Byte 1 and 2 of T_{HIGH} Register

Byte	D7	D6	D5	D4	D3	D2	D1	D0
1	H11	H10	H9	H8	H7	H6	H5	H4
	(H12)	(H11)	(H10)	(H9)	(H8)	(H7)	(H6)	(H5)
2	H3	H2	H1	H0	0	0	0	0
	(H4)	(H3)	(H2)	(H1)	(H0)	(0)	(0)	(0)

Table 11. Byte 1 and 2 of T_{LOW} Register

Byte	D7	D6	D5	D4	D3	D2	D1	D0
1	L11	L10	L9	L8	L7	L6	L5	L4
	(L12)	(L11)	(L10)	(L9)	(L8)	(L7)	(L6)	(L5)
2	L3	L2	L1	L0	0	0	0	0
	(L4)	(L3)	(L2)	(L1)	(L0)	(0)	(0)	(0)

Configuration Register

The Configuration Register is a 16-bit read/write register used to store bits that control the operational modes of the temperature sensor. Read/write operations are performed MSB first. Table 12 and Table 13 list the format and power-up and reset values of the configuration register.

Table 12. Configuration Register High Byte

Bit	Field	Default	Description
7	OS (R)	0	One-Shot and Conversion Completion Flag 1=Temperature not converting 0=Temperature is converting
6	R1 (R)	1	Set to 11 on Power-up
5	R0 (R)	1	Temperature measurement resolution is 12bits
4	F1 (R/W)	0	Flag Bit for the Number of Over-Temperature Required to Activate the ALERT Pin 00 = 1 time (Default) 01 = 2 times 10 = 4 times 11 = 6 times
3	F0 (R/W)	0	
2	POL (R/W)	0	ALERT Pin Polarity Flag 1 = ALERT pin is high when activated 0 = ALERT pin is low when activated
1	TM (R/W)	0	Device Working Mode Flag Bit 1 = Interrupt mode 0 = Comparator mode
0	SD (R/W)	0	Shutdown Mode Flag 1 = Shutdown mode 0 = Continuous conversion mode

Table 13. Configuration Register Low Byte

Bit	Field	Default	Description
7	CR1 (R/W)	1	Continuous Conversion Rate Flag 00 = 0.25Hz 01 = 1Hz 10 = 4Hz (Default) 11 = 8Hz
6	CR0 (R/W)	0	
5	AL (R)	1	Alarm Function Fag Bit in Compare Mode, When the POL bit equals 0, the AL bit reads as 1 until the temperature equals or exceeds THIGH for the programmed number of consecutive faults, causing the AL bit to read as 0. The AL bit continues to read as 0 until the temperature falls below TLOW for the programmed number of consecutive faults, when it again reads as 1. If POL=1, the behavior of the AL bit is the opposite of the above. The status of the TM bit does not affect the status of the AL bit.
4	EM (R/W)	0	Extended Mode Flag 1 = Extended mode 0 = Normal mode
3	0	0	/
2	0	0	/
1	0	0	/
0	0	0	/

13.Application and Implementation

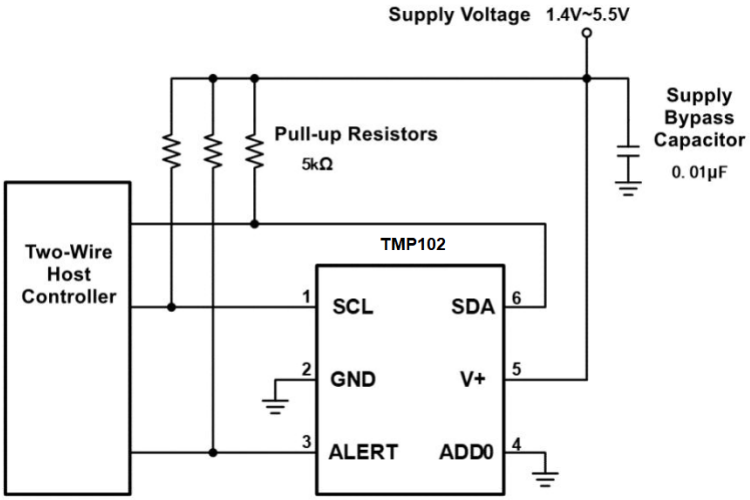

Figure 9. Typical Connections of the UMW TMP102A

The UMW TMP102A device requires pull-up resistors on the SCL, SDA, and ALERT pins, as shown in Figure 9, the recommended value for the pull-up resistors is 5kΩ. In some applications the pull-up resistor can be lower or higher than 5kΩ but must not exceed 3mA of current on any of those pins.

The UMW TMP102A device is a very low-power device and generates very low noise on the supply bus. Applying an RC filter to the V+ pin of the UMW TMP102A device can further reduce any noise that the device might propagate to other components. RF in Figure 10 must be less than 5kΩ and CF must be greater than 10nF.

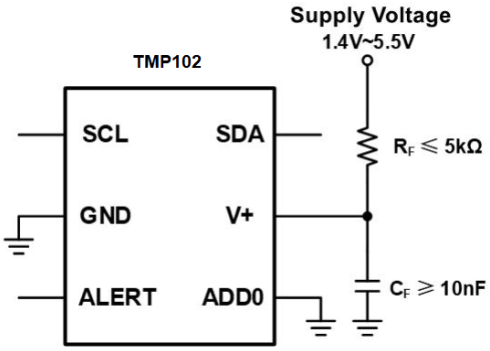

Figure 10. Noise Reduction Techniques

14.SOT-563 Package Outline Dimensions

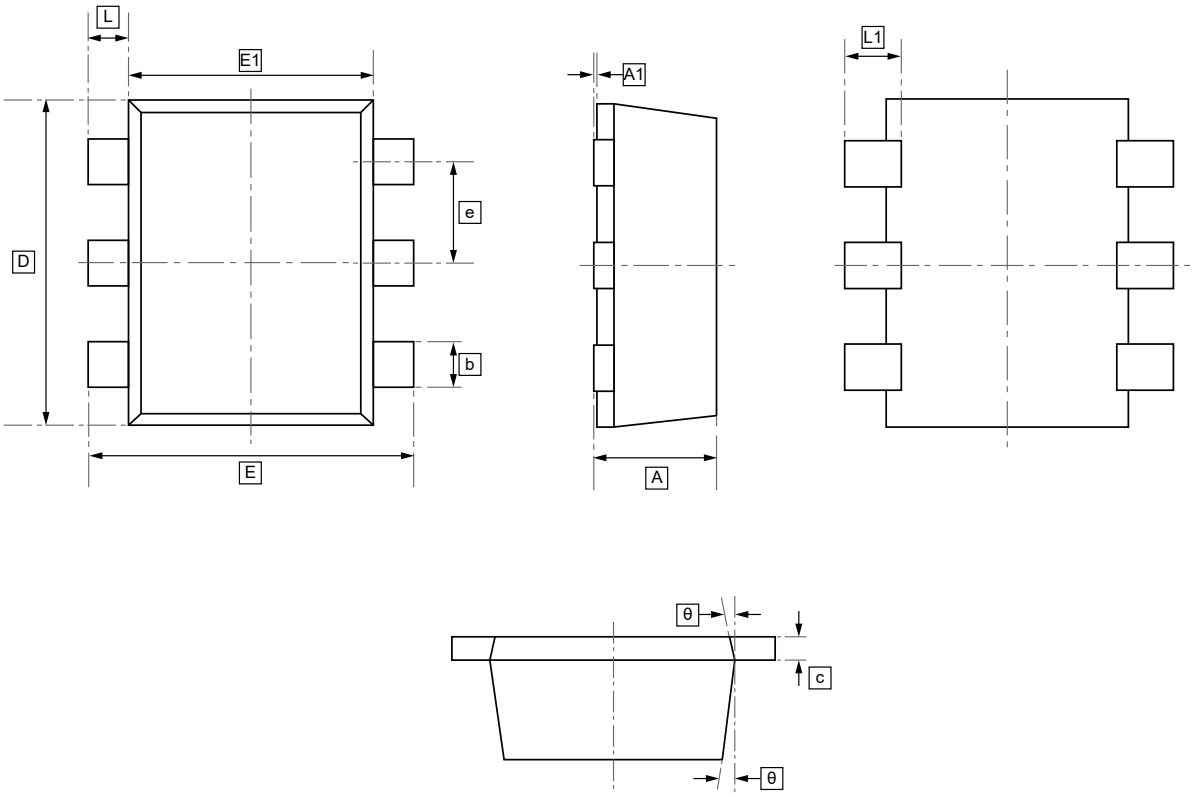

DIMENSIONS (mm are the original dimensions)

Symbol	A	A1	e	c	D	b	E1	E	L	L1	θ
Min	0.525	0.000	0.450	0.090	1.500	0.170	1.100	1.500	0.100	0.200	7°
Max	0.600	0.050	0.550	0.160	1.700	0.270	1.300	1.700	0.300	0.400	REF

15.Ordering Information

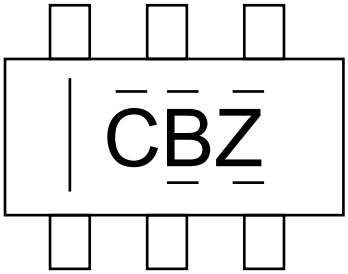

Order Code	Package	Base QTY	Delivery Mode
UMW TMP102AIDRLR	SOT-563	3000	Tape and reel

16.Disclaimer

UMW reserves the right to make changes to all products, specifications. Customers should obtain the latest version of product documentation and verify the completeness and currency of the information before placing an order.

When applying our products, please do not exceed the maximum rated values, as this may affect the reliability of the entire system. Under certain conditions, any semiconductor product may experience faults or failures. Buyers are responsible for adhering to safety standards and implementing safety measures during system design, prototyping, and manufacturing when using our products to prevent potential failure risks that could lead to personal injury or property damage.

Unless explicitly stated in writing, UMW products are not intended for use in medical, life-saving, or life-sustaining applications, nor for any other applications where product failure could result in personal injury or death. If customers use or sell the product for such applications without explicit authorization, they assume all associated risks.

When reselling, applying, or exporting, please comply with export control laws and regulations of China, the United States, the United Kingdom, the European Union, and other relevant countries, regions, and international organizations.

This document and any actions by UMW do not grant any intellectual property rights, whether express or implied, by estoppel or otherwise. The product names and marks mentioned herein may be trademarks of their respective owners.