1.Features

- IEC 61000-4-2(ESD)±15KV(air), ±8KV(contact)
- 150Watts peak pulse power (tp=8/20μS)
- Ultra low capacitance: 1.5pF maximum
- Low clamping voltage
- Weight 5.0 mg

2.Applications

- Ethernet

3.Pinning information

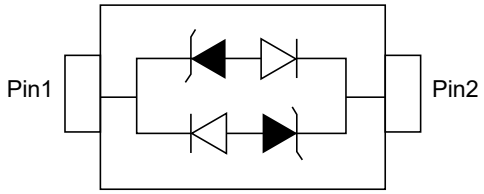

SOD-323

4.Part Number and Electrical Parameter

Part Number	I_{DRM}@V_{DRM}		V_{BR}①@I_R		V_C@I_{PP}②		V_C@I_{PP}②		C_O③	
	μA	V	V	mA	V	A	V	A	pF	pF
	MAX		MIN		MAX		MAX		TYP	MAX
BV03CW	0.5	3	3.5	1	5.8	1	15	10	0.85	1.5

Notes:

Absolute maximum ratings measured at T= 25ºC RH=45%-75% (unless otherwise noted).

① V_{BR} is measured at I_R=1mA.

② Surge Waveform: 8/20μs.

③ Off-state capacitance is measured in V_{DC}=0V,V_{RMS}=1V,f=1MHz.

5.Thermal Considerations

Parameter	Symbol	Value	Units
Junction Temperature Range	T_J	-55 to 150	°C
Storage Temperature Range	T_S	-55 to 150	°C

6.Environmental Characteristics

Parameter	Technical standards
High Temperature Reverse Bias Test	Temperature: 150±3°C Bias=80%, V_{DRM} Time:168H
High Temperature Life Test	Temperature: 150°C, Time:168H
High-low Temperature Cycle Test	Temperature:From -40°C, to125°C, Dwell time： 30min,10cycles
High Temperature &High Humidity Test	Temperature: 85°C Humidity:85%, Time:168H
Pressure Cooker Test	Temperature: 121°C, 2atm. Humidity:100% , Time:24H
Resistance of Soldering Heat	Temperature: 260±5°C, Time of dip soldering: 10s, 3times

Notes:

The above testing items can be specified by customer's special request.

7.Electrical Parameters (T_A=25°C unless otherwise noted)

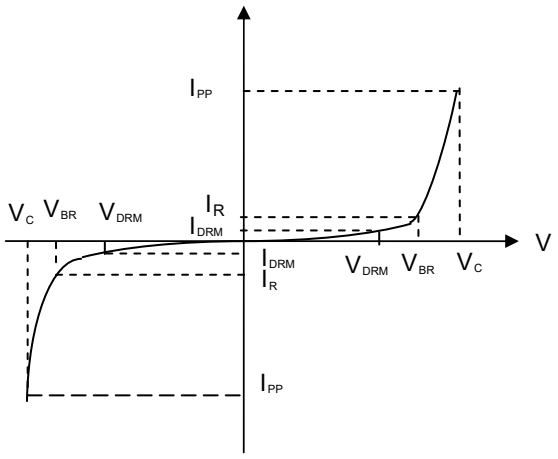

Symbol	Parameter
V_C	Clamping Voltage
I_{PP}	Surge Waveform 8/20μs
V_{DRM}	Stand-off Voltage
V_{BR}	Breakdown Voltage
I_{DRM}	Reverse Leakage Current
I_R	Test Current
P_{PP}	Peak Pulse Power Dissipation

8.Typical characteristic

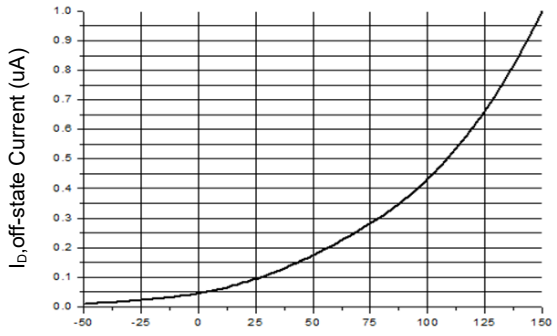

T_J,Junction Temperature(°C)

Figure 1: Off-state Current VS Junction Temperature

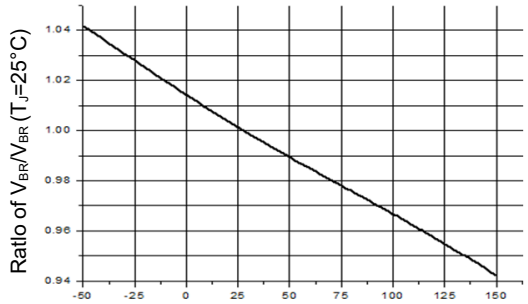

T_J,Junction Temperature(°C)

Figure 2: Breakdown Voltage Vs Junction Temperature

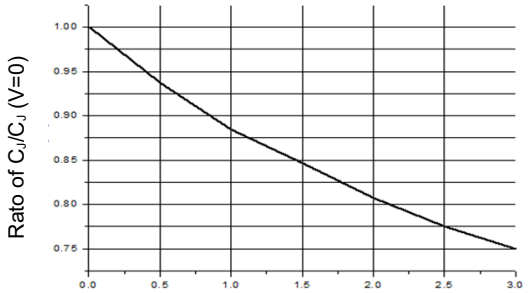

V_D, Off-state Voltage (V)

Figure 3: Typtical Junction Capacitance(f=1MHz))

9.SOD-323 Package Outline Dimensions

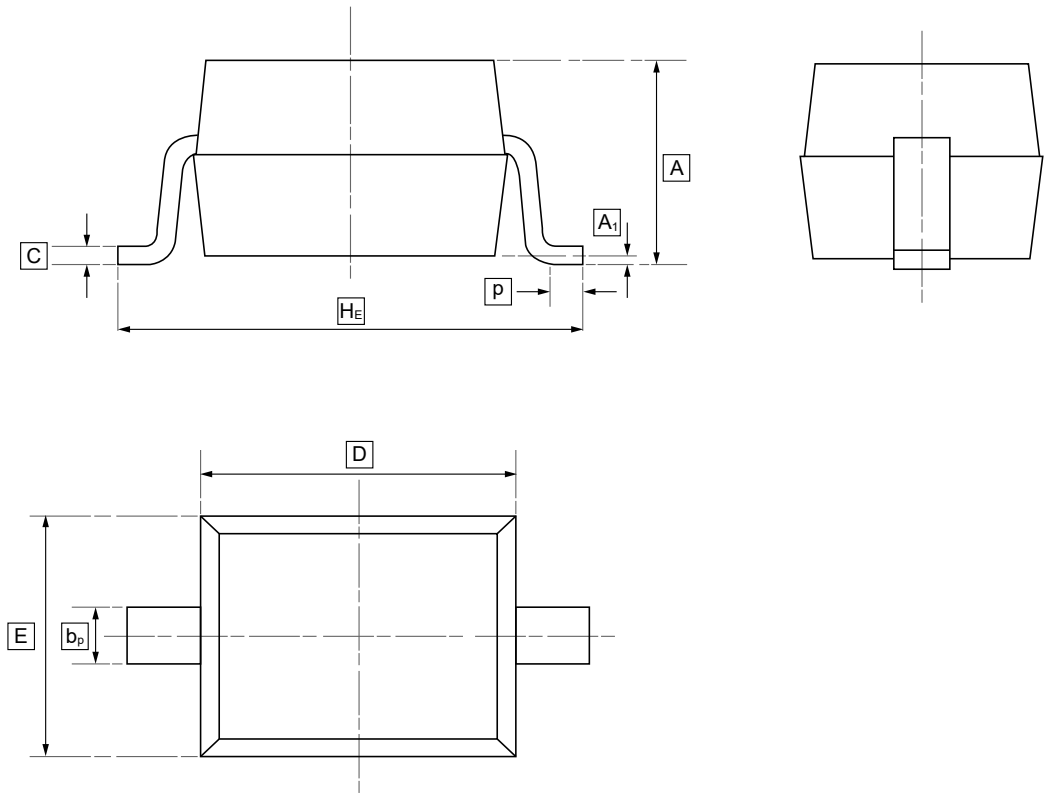

DIMENSIONS (mm are the original dimensions)

Symbol	A	b_p	C	D	E	H_E	A_1	P
Min	0.90	0.25	0.10	1.60	1.15	2.30	0.01	0.20
Max	1.20	0.40	0.15	1.80	1.35	2.80	0.10	0.50

10.Ordering information

ww: Batch Code

Order Code	Package	Base QTY	Delivery Mode
UMW BV03CW	SOD-323	3000	Tape and reel

11.Disclaimer

UMW reserves the right to make changes to all products, specifications. Customers should obtain the latest version of product documentation and verify the completeness and currency of the information before placing an order.

When applying our products, please do not exceed the maximum rated values, as this may affect the reliability of the entire system. Under certain conditions, any semiconductor product may experience faults or failures. Buyers are responsible for adhering to safety standards and implementing safety measures during system design, prototyping, and manufacturing when using our products to prevent potential failure risks that could lead to personal injury or property damage.

Unless explicitly stated in writing, UMW products are not intended for use in medical, life-saving, or life-sustaining applications, nor for any other applications where product failure could result in personal injury or death. If customers use or sell the product for such applications without explicit authorization, they assume all associated risks.

When reselling, applying, or exporting, please comply with export control laws and regulations of China, the United States, the United Kingdom, the European Union, and other relevant countries, regions, and international organizations.

This document and any actions by UMW do not grant any intellectual property rights, whether express or implied, by estoppel or otherwise. The product names and marks mentioned herein may be trademarks of their respective owners.